Process Technology

CIP-Systems for the

Wine Industry

Created by: Hans Hiendl

Date: 06/18/2009

KRONES

Outline

Introduction

Basics
- … of Cleaning

CiP Units
- Standard application

Summary

KRONES

KRONES Processing Capabilities

Process Engineering

Industry

CSD	Water	Beer	Wine/Spirits	Dairy

Process Systems / Equipment

Technology

CIP	Pasteurization	Brewing tech.	Syrup Room	Mixing / CO_2

Service/ System

Continuous Mixing	Bulk Reception Ingredient Handling	Blending Reduction	Piping Installation	Automation Control

Filling Media

Product

Still/ CSD / Beer	Hot Fill	ESL	Aseptic

KRONES

Cleaning & Disinfection

Definitions

Cleaning

- Removal of residues and deposits by way of mechanical or chemical means
- Generation of clean and sanitary surfaces

Disinfection

- Selective killing of pathogenic and other harmful microorganisms (MO's) in piping and vessels so that the MO's will not cause contaminations
- Avoiding of infection and destruction of unwanted microorganisms

Sterilisation

- Physical or chemical process which kills ALL microorganisms and spores
- Complete sterility

Cleaning agents

Acidic cleaning agents

- H_2SO_4, HNO_3, H_3PO_4
- Used for removing of anorganic substances like scaling (minerals) and other deposits coming from water hardness

Neutral cleaning agents

- Ionic and non-ionic tensids and mixtures
- These are molecules with hydrophobic and hydrophilic in part
- They are used for removing of oils and fats

Alkaline cleaning agents

- NaOH, KOH
- They are used for removing organic substances like sugars, proteins and fats

KRONES

Factors of influence on cleaning

Considerations for object (surface) you want to clean

- Dirt
- Age of deposits
- Texture
- Sticking properties

Cleaning agent (e.g. acids for scaling)

Concentration of the cleaning agent

Contact time

Temperature

Cleaning procedure

- Mechanical
- Chemical
- Combined

KRONES

Additives of cleaning agents

To get a better cleaning effect, cleaning agents often have additives:

- Complexing agents
  - Softeners take away Ca and Mg
- Antifoam agents
- Avoiding of scaling
- Protection from corrosion
- Wetting agents
  - Reduces surface tension
- Stabilizers

KRONES

Procedures of cleaning

Contact phase

- Ingredients of the cleaning agents solubilise (surface active substances)

Wetting phase

- Total wetting of the deposits by surface active substances

Penetration phase

- Dirt is partly taken away from the surface

Dispersion phase

- Disintegration of dirt particles

Emulsification and suspension phase

- Trapping of substances and discharge

Post cleaning phase

- Defined by dirt carrying ability of the cleaning agent (avoiding reprecipitation)

KRONES

Types of cleaning procedures and precautions

Types of cleaning procedures

- Manual (with brushes) or automatic cleaning
- Chemical or mechanical cleaning
- Low pressure cleaning (1 – 8 bar) or high pressure (10 – 150 bar)
- Lost or recovered cleaning (CIP)

Precautions and protection

- Protective clothing
- „First water then concentrate…“
- Never put cleaning or disinfectant agents into food packaging
- If there is contact, rinse with lots of water and contact physician

Material compatibility

- You have to watch the reaction between cleaning and disinfectant agents and materials (e.g. never use chlorine containing agents in contact with stainless steel → pitting corrosion, causes seals to degenerate

CIP cleaning procedures

Typical cleaning recipe

- Rinsing with water
- Cleaning with caustic
- Rinsing with water
- Cleaning with acid
- Rinsing with water
- Disinfection

Water tank – cold

Water tank – hot

Recovered water tank

Caustic tank – cold

Caustic tank – hot

Acid tank

There are different CIP-plants for the different departments (brewhouse, unfiltrate area, filtrate area, bottling). If we do so cleaning agents used can be more selective

Concentration is measured by conductivity measurement devices

Caustic can be regenerated by sedimentation, sieving or filtration

Never mix caustic and acidic cleaning agents, it is very dangerous !!!

Carefully monitor temperatures while cleaning tanks (hot → cold → vacuum) !!!

KRONES

Disinfectant

Requirements:

- High water solubility
- General performance
- No resistance to microorganisms
- Cleaning effect with low temperatures
- Low surface tension
- No condensation
- Good rinsing properties
- Low costs, nontoxic, sprayable without foaming

Types of disinfectants:

- Mechanical (sterile filtration)
- Physical (ultraviolet rays)
- Thermal (steam or hot water)
- Chemical

Chemical disinfectants

Alcohol

- Only kills live cells, not spores

Aldehyde (Formaldehyde – formalin compounds)

- Broadly based cleaning effect
- Low effect on yeast and mildews
- Slow cleaning effect
- Pharmacy taste
- Cancer causing

Phenols

- Foreign odour
- Poorly water soluble

Halogens (NaOCl, Jod)

- Do not use for stainless steel
- Chlorination of water
- Activated chlorine for cleaning

Chemical disinfectants

Oxidisers

- H_2O_2, paracetic acid
- No residue (disaggregation to O_2 and H_2O)
- Long residence time

Quaternary ammonium compounds

- Wetting agent with low surface tension
- High surface activity
- High anti microbiological effect
- 0,1-0,2 %
- Problems with rinsing
- Reduction of foam stability
- Sulphurous agents ($Na_2S_2O_5$, sulphurous acid)
- Amphotensids, antibiotics, chemo-therapeutics

Outline

Introduction

Basics
- … of Cleaning

CiP Units
- Standard application

Summary

KRONES

Units & Systems Business Model

Units

CIP – VarioClean
550 units until 2008

- Units for a standalone business
- Units as core components for systems
- Highly specified processes in modular design for blending, thermal treatment, cleaning etc.

➢ Over 1600 units installed worldwide

Systems

Syrup room – Soft Drink

- Systems from raw material reception to final prepared product which is sent to filling and packaging area.
- Industries: SD, CSD, Juices, Dairy, Spirits & Liqueur, Food

➢ Over 70 systems installed worldwide

KRONES

Characteristic Points – for all Units of PT2

Tube frame as hygienic basis of units

Exact the same HMI for every unit incl. active P&ID (no time lag)

Consequence test procedures of units under real circumstance in-house

Integration of components with minimum of maintenance efforts (e.g. pumps)

- > Tube frame ensure easy installation and advanced hygienic level
- > Operator & Maintenance find easy points of interests due to identical touch interface
- > Comprehensive FAT ensure totally assembled and commissioned processes ex work
- > Wear parts number reduced and are easy accessible, e.g. slide ring seals of pumps

KRONES

KRONES VarioClean – CIP-System

In principle depends CIP configuration on …

- Product
- Philosophy (central / de-central)
- Product & filling processes
- Numbers of machinery to clean
- Layout
- Automation level of up- and downstream machinery

Potential configuration …

- Flow rate: 10 to 100m3/h
- Tanks: 1 – 4 / 1.5 – 24m3
- Lines: 1 – 4
- SPS controlled
- LDS monitored
- Inline dosing process (no tank)

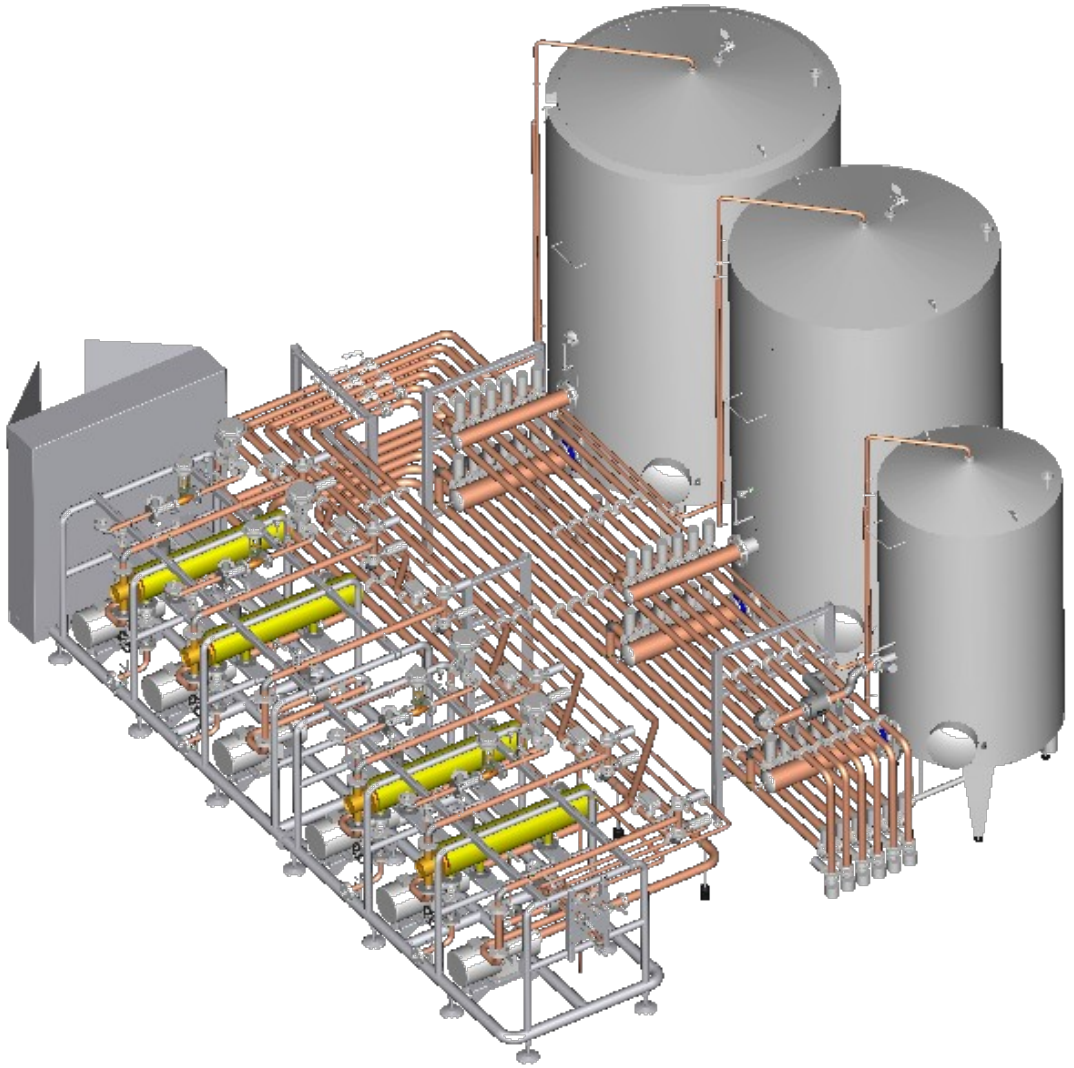

KRONES

KRONES VarioClean – CIP-System

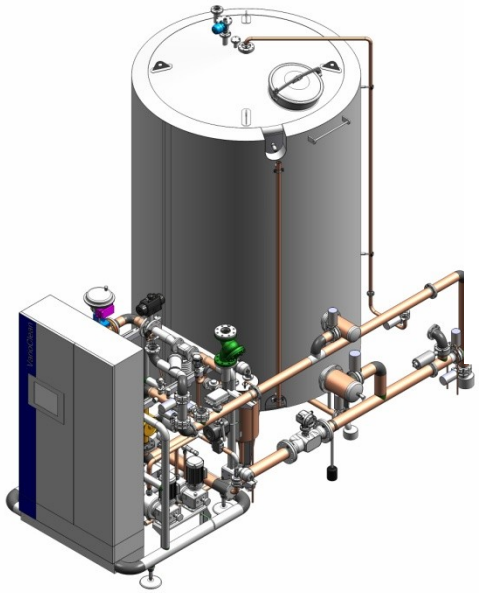

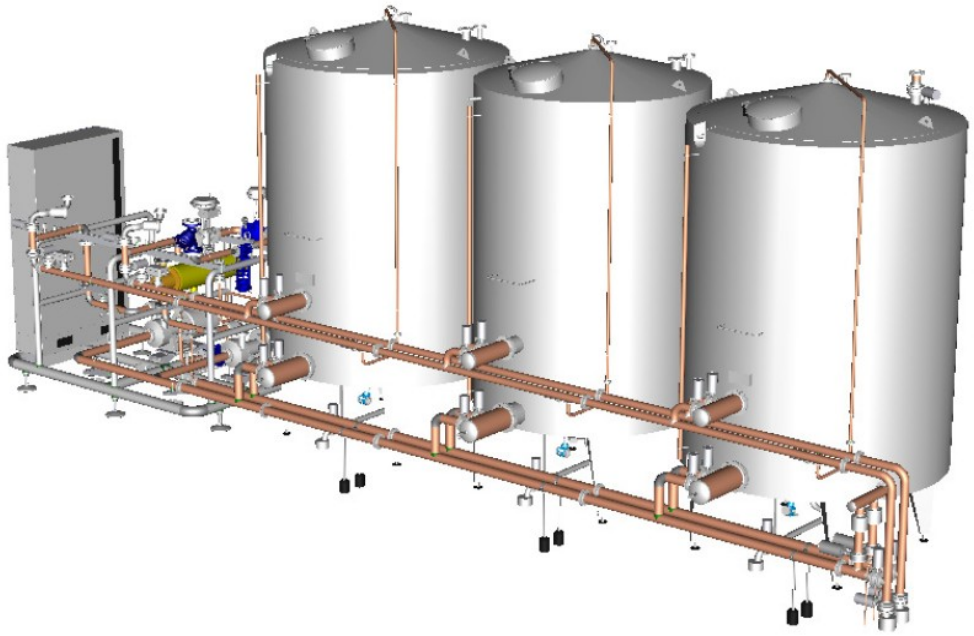

> Bespoken solution for customer requests!

KRONES

Characteristics - Aseptic Process & Equipment

AquaAsept
first built in 2005
109 units until 2008

VarioClean*
first built in 1993
550 units until 2008

VarioDos
first built in 2007
60 units until 2008

> Sanitation with liquid caustic, acid and PAA
- Reduction of sanitation time about 30min. Compare to foam or gel application
- Closed circuit of detergent => significant less lost of sanitation detergent and process water compare to foam or gel application

* Units can be also delivered as stand-alone and for standard process/filling applications.

KRONES

KRONES VarioClean – Machine Configuration

Machine configuration - standard

- Piping AISI 316L
- Tanks AISI 304
- Hygienic armatures, pumps, sensor
- Temperature measure – at return pipe
- Conductivity measure – at return pipe

Machine configuration - option

- Flow rate measure
- LDS monitored
- Tanks in AISI 316L
- Inline dosing (e.g. acid)
- Panel (easy distribution knot)

> Minimum of media consumption and cleaning time due to temperature and conductivity controlled process

> Maximum of biological & chemical security

KRONES

KRONES VarioClean – Cleaning Process

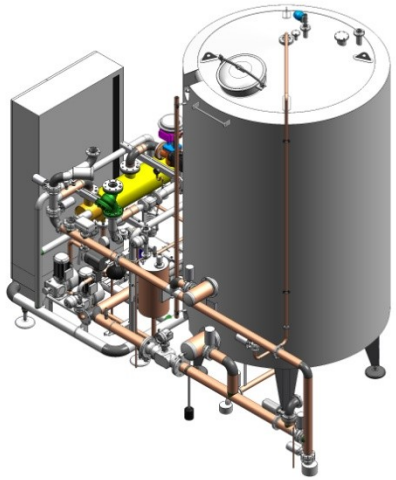

Potential cleaning process for wine filler (status right after production; CIP plant has been prepared before = caustic soda is heated and pre-dosed)

- Pre-flushing with process water (5 minutes)
  - Removal of glass fragments and product residuals
  - CIP cups aren't inserted
- Insert CIP cups (piping remaining full with water, ring bowl or potential vessels are empty)
- System will be filled with caustic until infeed of filler and will be heated via bypass of filler to the CIP until parameters of temperature + conductivity are reached (measure spot and drainage spot at return pipe of CIP). Then caustic will be released into filler and the CIP process will be started to count when parameters of temperature + conductivity are achieved in closed circle again.
- Parameters of cleaning, e.g. 20 minutes, 2% caustic soda concentration, 80 to 85°C
- Flushing with process water after succeeded of cleaning process controlled by conductivity measure
- Process change to product preparation; CIP is shut down.

- Option: cleaning with acid for instance once per quarter (e.g. phosphoric, nitric, citric acid) at ambient up to 45°C, 1%, inline dosing.

> Reproducible process helps ensure security and reasonable media consumption

KRONES

KRONES VarioClean – Things to be discussed

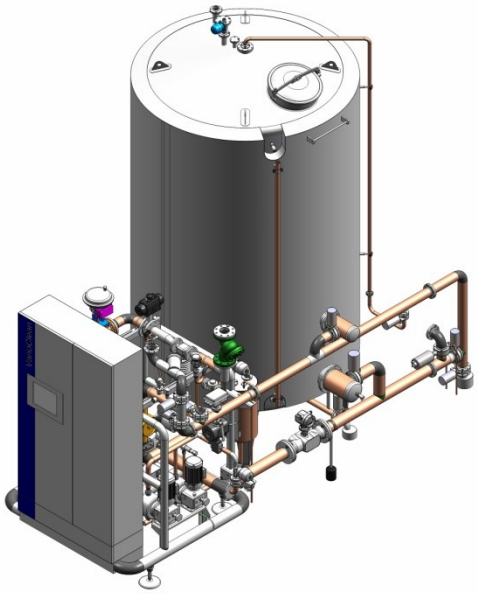

Heat media

- Steam (3 – 4 bar) easy more then we adjusted accordingly
- Steam with 1 bar feasible but is needed more heat exchanger surface
- High temperature hot water (under pressure 3 – 4 bar, 121°C -> also with 0,9 bar feasible but more heat exchanger surface)
- Electrical heat exchanger (might be a bit more invest and running cost, app. 120KW, depends on flow rate, volume of detergent)

> All roads lead to Rom – Bespoke customer solution!

KRONES

KRONES VarioClean – Manual / Automatic

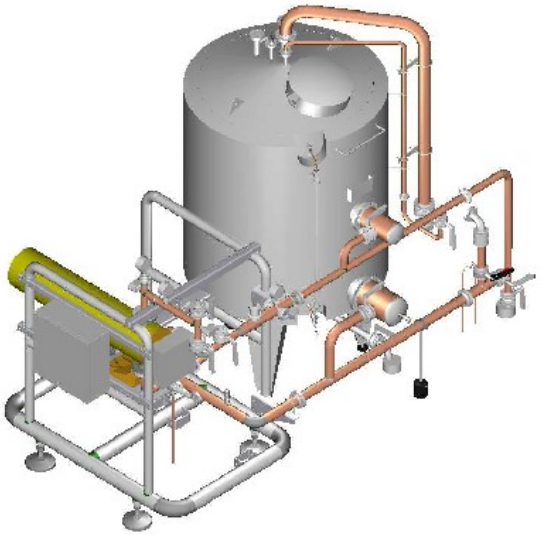

CIP plant manual –
Flow rate15m3/h, Tank 1.5m³
Temp., Conductivity measure

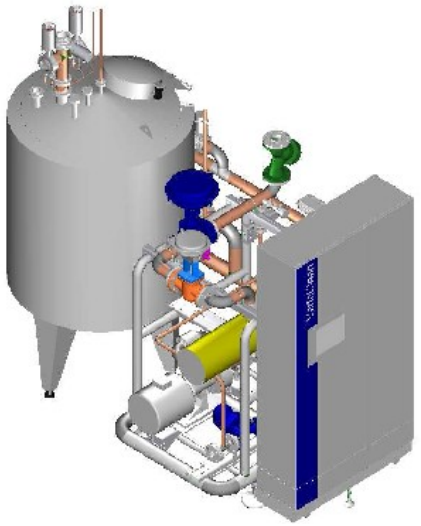

CIP plant automatic –
Flow rate15m3/h, Tank 1.5m³
Temp., Conductivity measure

> Chose the right application depends on condition of up- and downstream equipments (e.g. automation level) and customer philosophy!

KRONES

yes

Thank you!

KRONES